LEDWIDE LIGHTING CO.,LTD

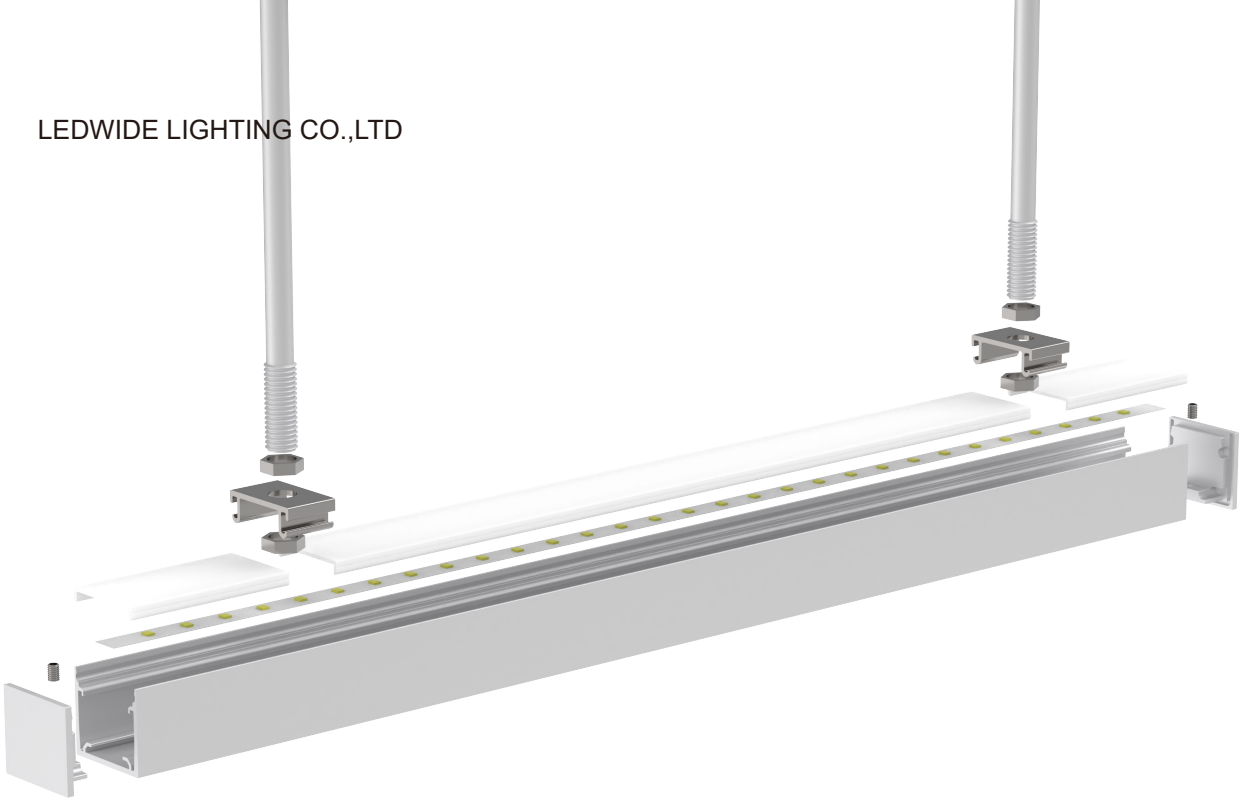


Surface

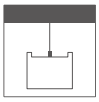
Suspended

LW-WN35-30

ACCESSORIES

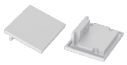
CNC Aluminium Endcap
Code: WN35-CAP-N


(Optional)
Suspension Kits
Code: Sus.KitsA


(Optional)
Aluminium Diffuser
Code: D005-AD


(Optional)
Joiners 180°B
Code: J-180B


(Optional)
Joiners 90°A
Code: J-90A


(Optional)
Joiners 180°A
Code: J-180A


(Optional)
Joiners 120°A
Code: J-120A


(Optional)
Suspension Rods
Code: Sus.RodsA

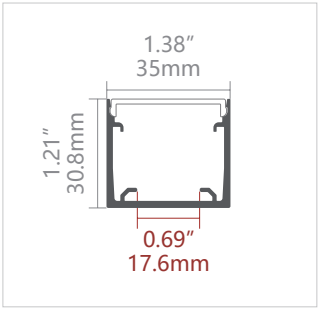

PMMA Diffuser

Color	Light Transmittance	Code
Opal	63%	D005-O
New Opal	74%	D005-N
Frost	89%	D005-F
Clear	95%	D005-C
Black	20%	D005-B



(can be 25m/roll)

PC MICRO PRISM Diffuser

Color	Light Transmittance	Code
Micro prism	66%	D005-MP

Tel: 0086 755 29362351 Direct: 0086 0 18680360436 Fax: 86 755 29014058 E-mail: info@ledwide.com www.ledwide.com
Address:1-2/F, Building A2,Sinopol Ind.Park, First Industrial Zone, BaiHua communities, Guangming New District, Shenzhen, P.R. China Postcode: 518107

Installing Instructions

Surface

1.

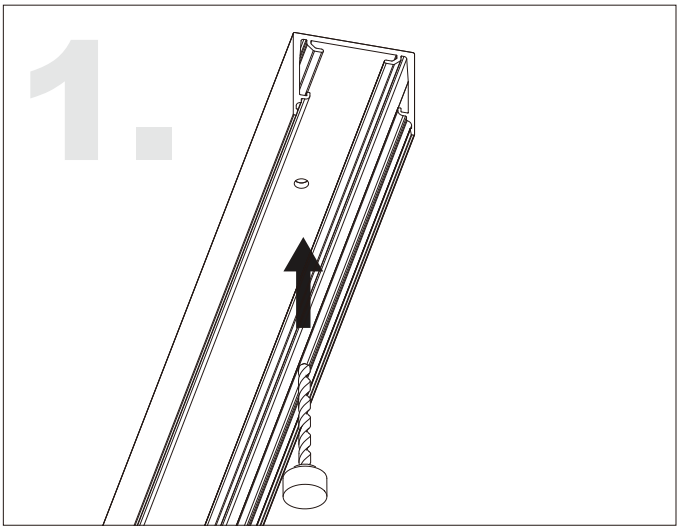

2.

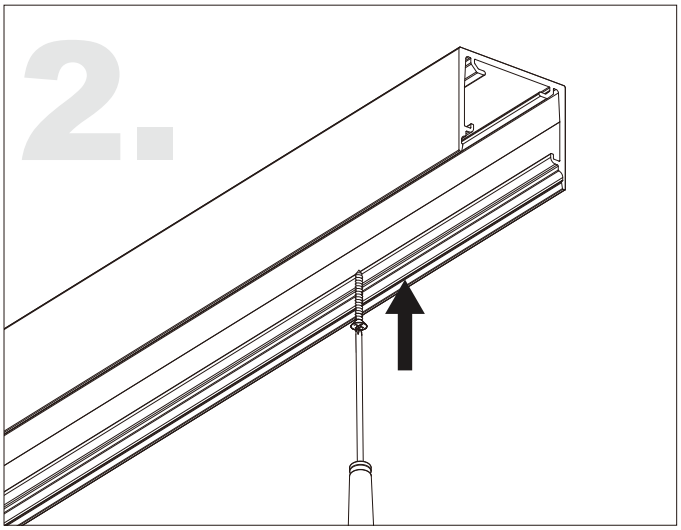

3.

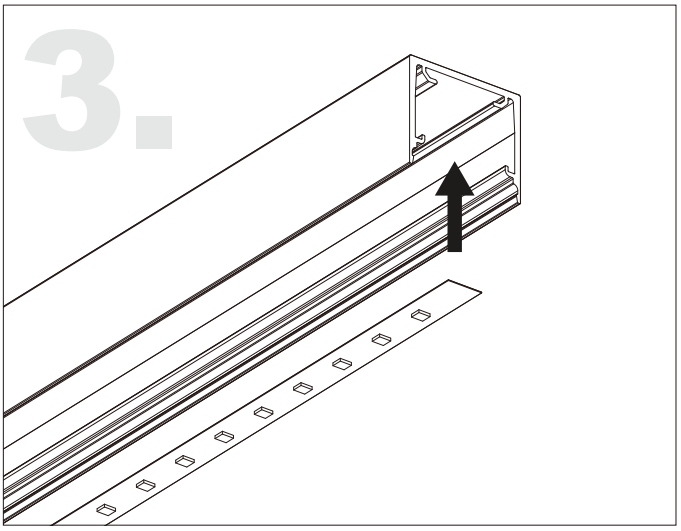

4.

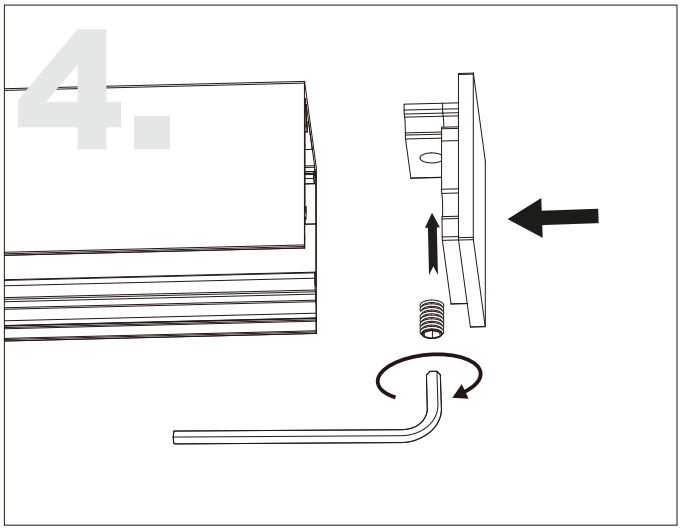

5.

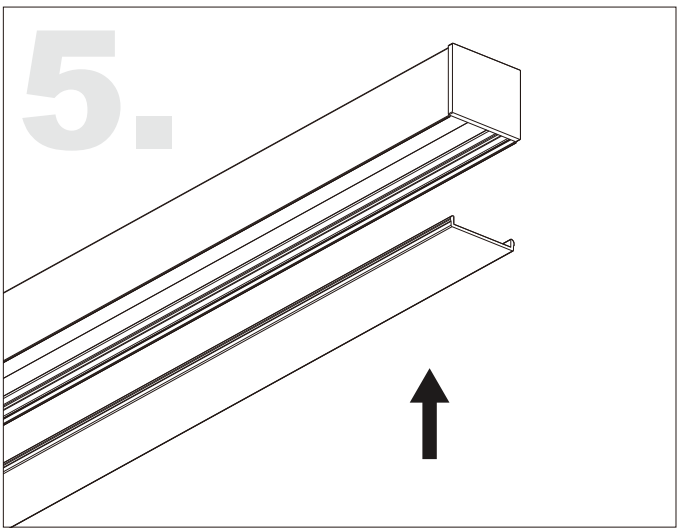

6.

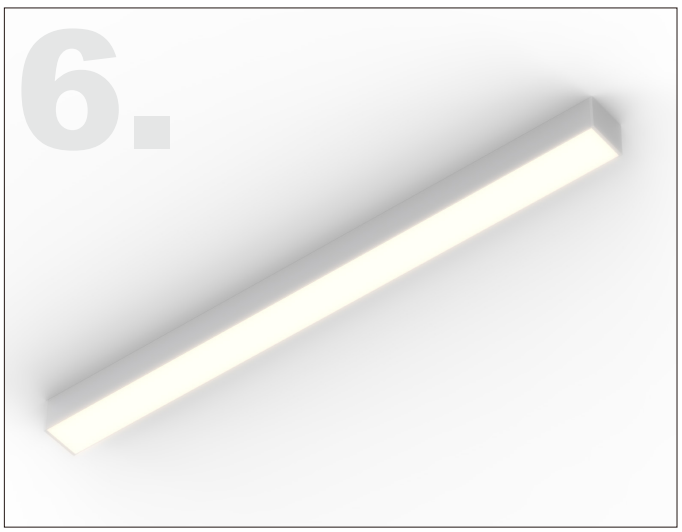

Installing Instructions (Suspension rods)

Suspended

1.

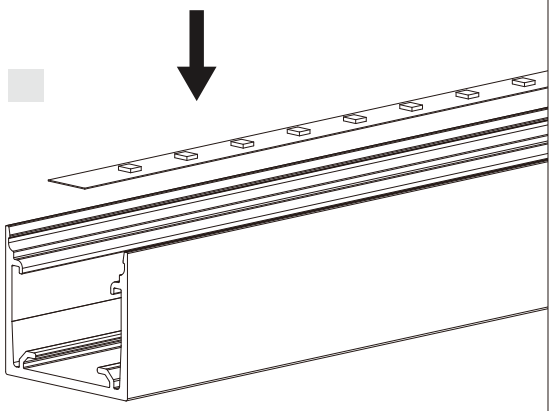

2.

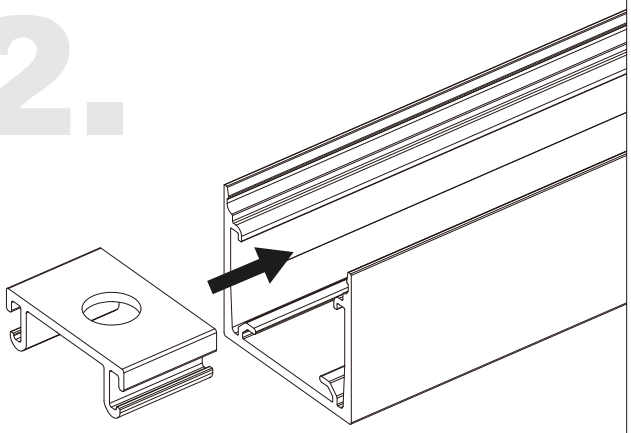

3.

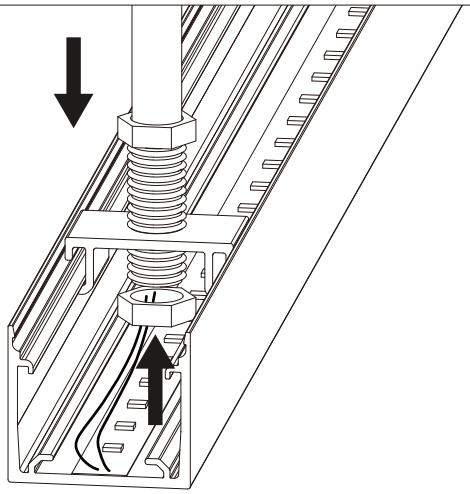

4.

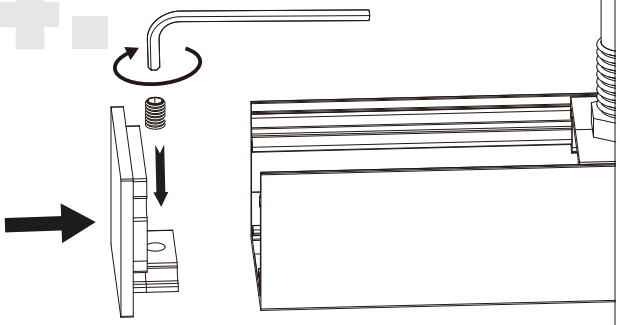

5.

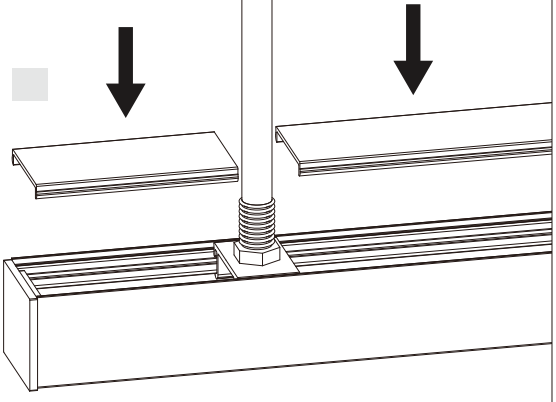

6.

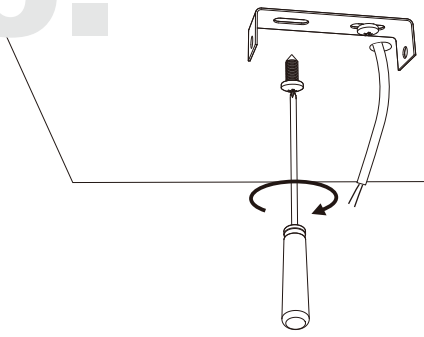

7.

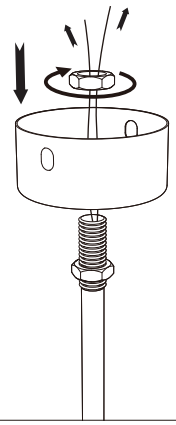

8.

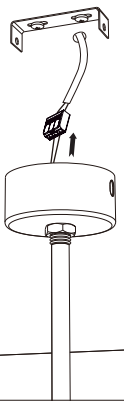

9.

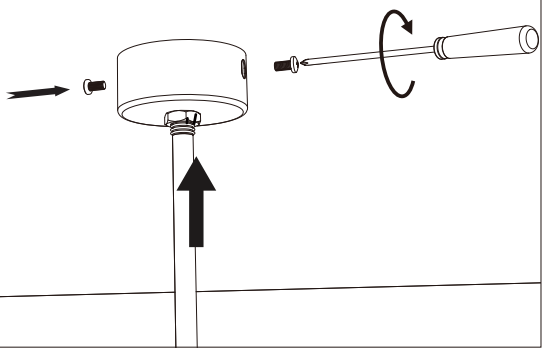

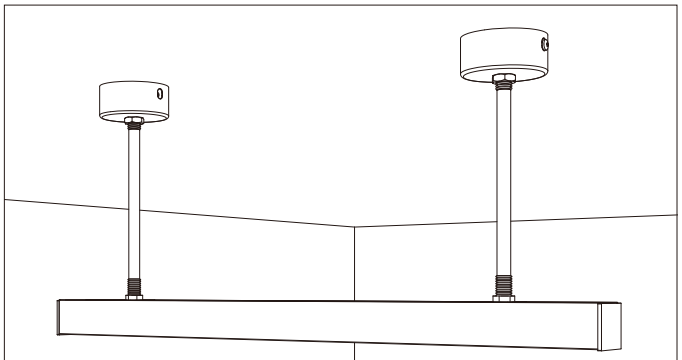

10.

Installing Instructions (Suspension kits)

Suspended

1.

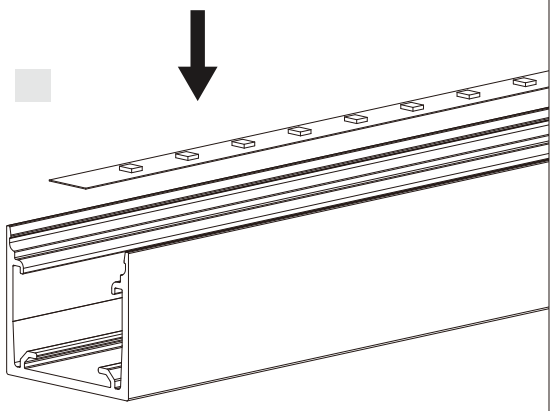

2.

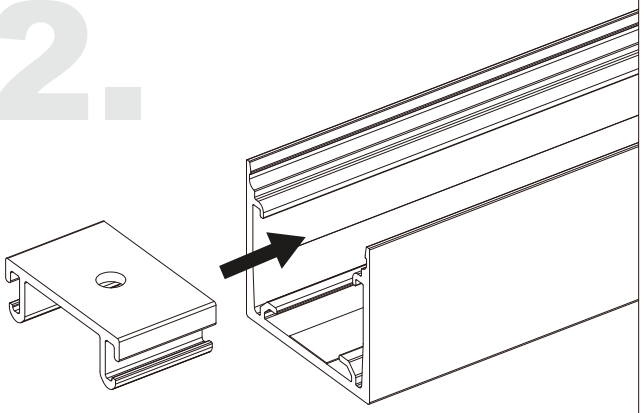

3.

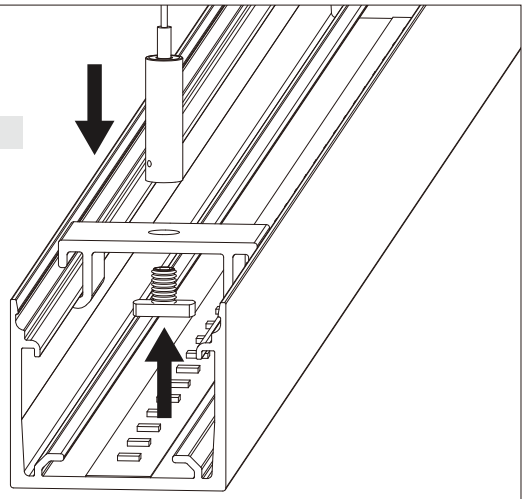

4.

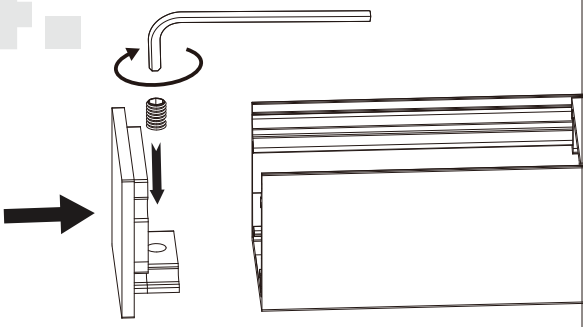

5.

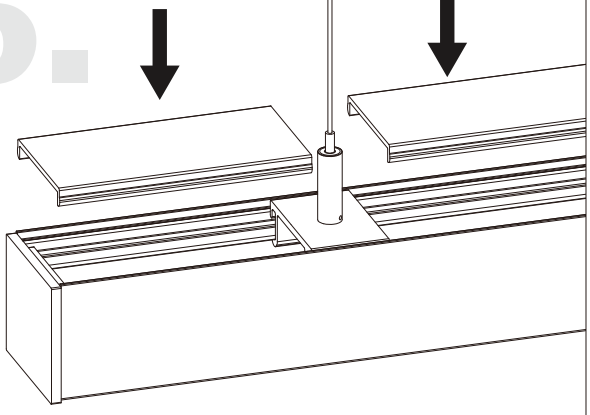

6.

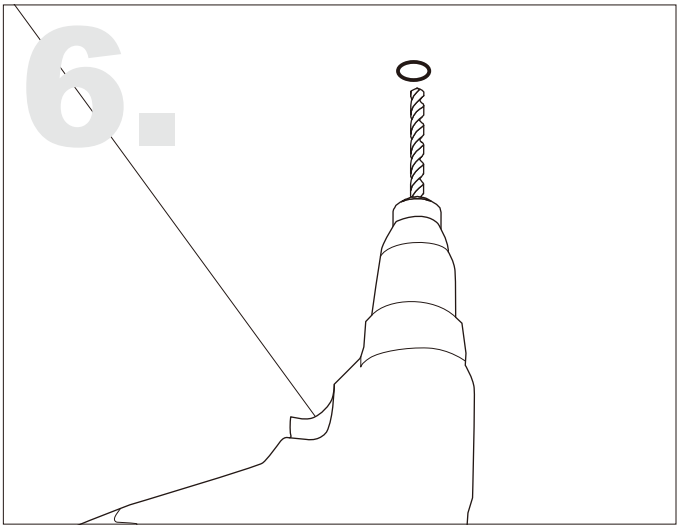

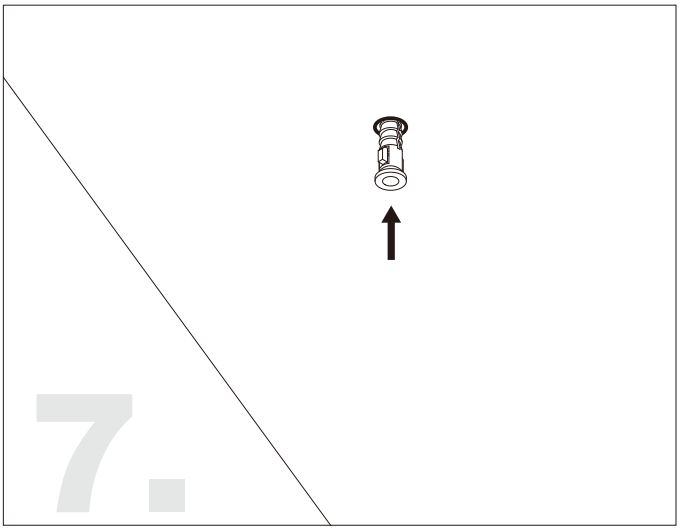

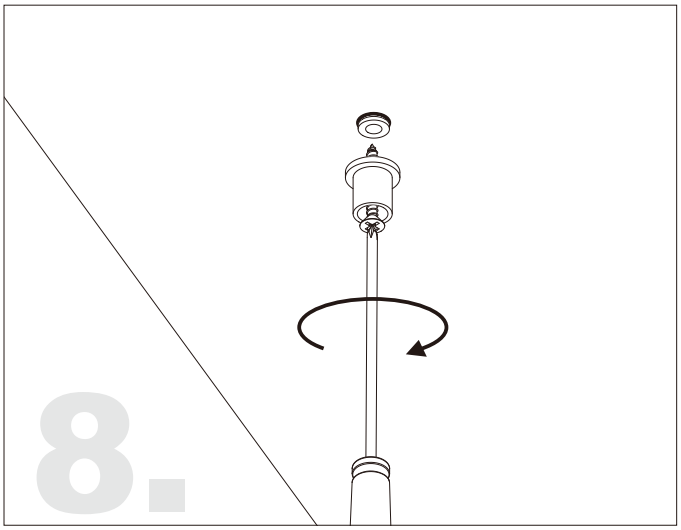

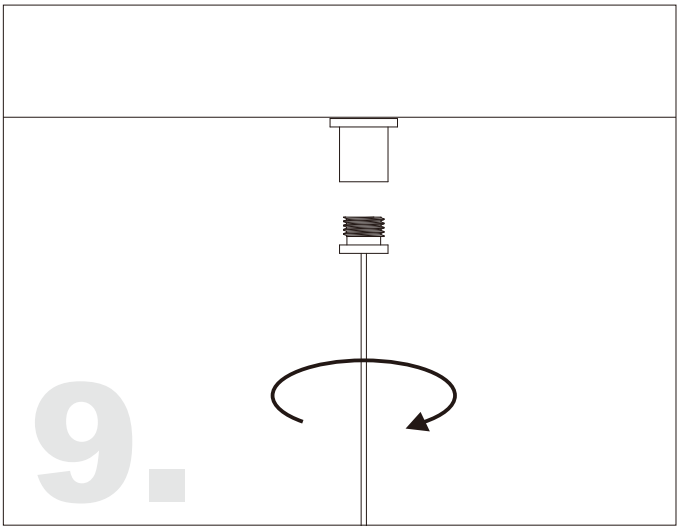

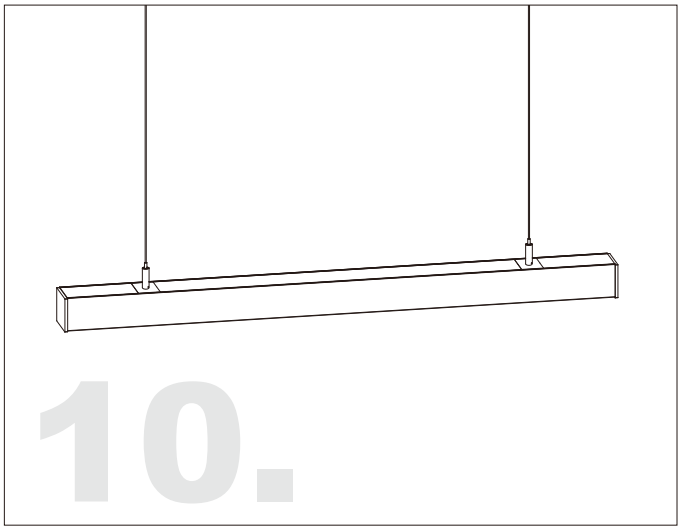

Other Installation & Connection Ways

